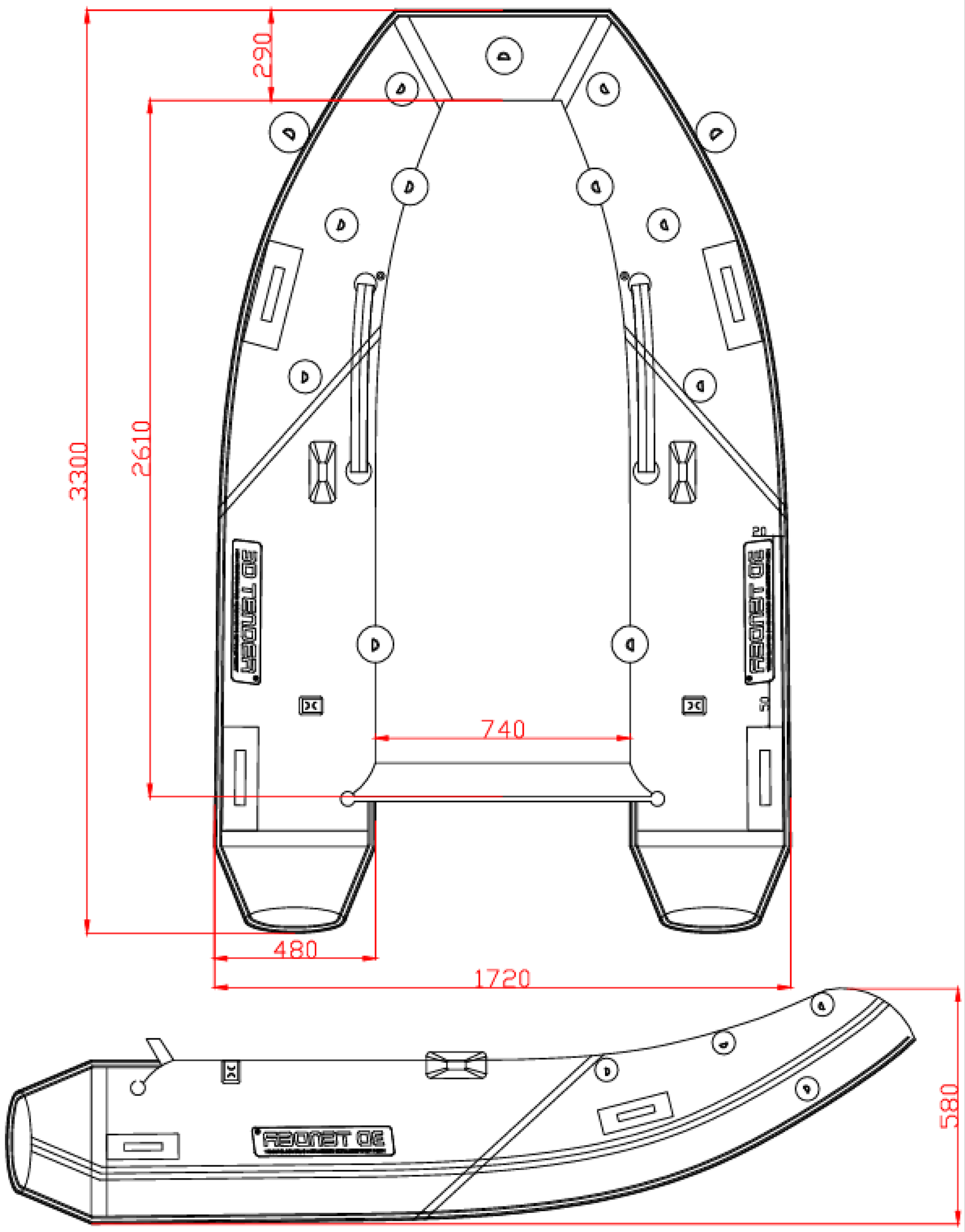

TWIN FAST CAT 330

3D TENDER